FRD FURUKAWA



EU STAGE V / EPA TIER 4 Final

HCR L110

All Products:
www.frd.eu

Highlights & Benefits

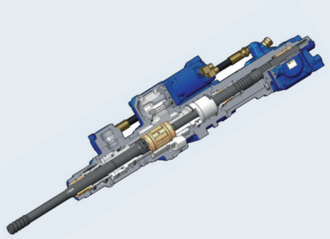

Drifter HD836

Originated by FRD and field proven, this unbeaten 36Kw drifter ensures powerful penetration and easy operation. Dual dampening system, reverse percussion, automatic impact and feed force adjustments are just a few benefits of the FRD HD800 series drifter



Cabin

A comfortable wide cabin with air suspension seat incl. heater. Intuitive operating levers in combination with an all-in-one touch screen. Controlling the HCR L110 with your fingertips.

Features

- Advanced rod changer
- Extendable boom
- Rear view camera's (side and rear)
- Heavy duty undercarriage



Highlights & Benefits

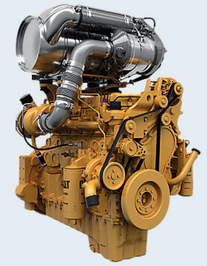

Engine

The eco-friendly Stage V engine in combination with our total fuel saving system results in low fuel consumption without sacrificing on performance. Our commitment to sustainability.

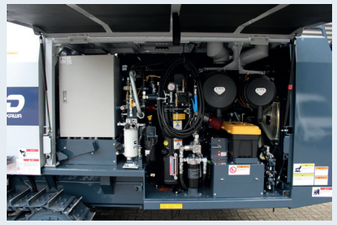

Accessibility

The large gull wing doors on both sides and practical positioning of the service components allows easy and safe access. Maintenance on a level as it should be.

Options

Available options, but not limited to:

- Centralized grease system
- 3D angle indicator
- Auto refueling system
- Additional working lights

Specifications

DIMENSIONS & WEIGHT		
Operating Weight ROPS/FOPS CAB (1300mm)	19,930 kg - 20,030 kg	
Overall Length (Transport)	10,015mm (11,116mm)	
Overall Width (Transport)	3,490mm (2,465mm)	
Overall Height (Transport)	4,620mm (3,520mm)	
DRIFTER		
Model	HD828	HD836
Weight (with Reverse Percussion)	271kg (312kg)	350kg (403kg)
Impact Rate	2,500 - 3,300min^{-1}	2,600 - 3,100min^{-1}
Rotating Speed	0 ~ 190 min^{-1}	0 ~ 120 min^{-1}
UNDERCARRIAGE		
Track Length	3,690mm	
Track Length on Ground	2,880mm	
Track Width	330mm	
Ground Pressure	102.9 kPa	
Ground Clearance	440mm	
Frame Oscillation Angle	± 7.5°	
Tramming Speed	0 ~ 3.5 km/h	
Gradeability	57.4% (30°)	
Maximum Traction Force	127.0 kN	
ENGINE		
Model	C9.3B (Stage V, Tier 4 Final)	
Type	Diesel, Watercooled 6 Cylinders	
Make	Caterpillar	
Power Output	280kW / 2,200min^{-1}	
Fuel Capacity	600L	
DEF Capacity	44.7L	
HYDRAULIC EQUIPMENT		
Variable Displacement PV Pump	PV Pump x 2	
Fixed Displacement Pump	Gear Pump x 3	
Hydraulic Oil reservoir Capacity	240L	
BOOM		
Model	JE326	
Type	Extension Boom	
Boom Lift Angle	Up 41°, Down 20°	
Boom Swing Angle	Right 32°, Left 5°	
Boom Slide Length	900mm	
GUIDE SHELL		
Model	GH832	
Length	8,700mm	
For 12 Ft. Length (with Reverse Percussion)	4,595mm	
For 14 Ft. Length (with Reverse Percussion)	5,225mm (5,050mm)	
Feed Type	Hydraulic Motor Chain Driven	
Guide Slide Length	1,500mm	
Guide Swing Angle	Right 25°, Left 90°	
Guide Tilt Angle	170°	
Maximum Rod Pull-Out Force	34kN	
COMPRESSOR		
Model	PDSF290S16	
Type	1 Stage Screw Compressor	
Free Air Delivery	13.5m^3/min	
Discharge Pressure	1.03MPa	

DUST COLLECTOR		
Model	A885	
Suction Capacity	40m^3/min	
Number of Filter Element	6	
Type of Dust Ejection	Automatic Air Pulse Jet	
ROD CHANGER		
Model	GR803	
Rod Diameter Rod Length Number of Rod Storage	T51 3,660mm 7	GT60 4,270mm 7
Rod Diameter Rod Length Number of Rod Storage	T51 4,270mm 7	GT60 Tube 4,270mm 6
BIT AND ROD	**HD828**	**HD836**
Bit Range	102~127 mm	102~140 (152) mm
Rod Diameter	T51, GT60	GT60, GT60 Tube
Rod Length	T51 3,660mm(12 Feet)	4,270mm (14 Feet)
	GT60 4,270mm(14 Feet)	5,490mm (18 Feet)
Maximum Starter Rod Length	T51 4,270mm(14 Feet)	5,490mm (18 Feet)
	GT60 5,490mm(18 Feet)	
ELECTRICS		
Battery	12V; 160Ah / 5h x 2	
Light	24V; 70Wx4	
Voltage	DC 24V	
OPERATING ENVIRONMENT		
Ambient Temperature Range	-15°C ~ +45°C	
Maximum Altitude	Max. 2,500m	

Dimensions (mm)

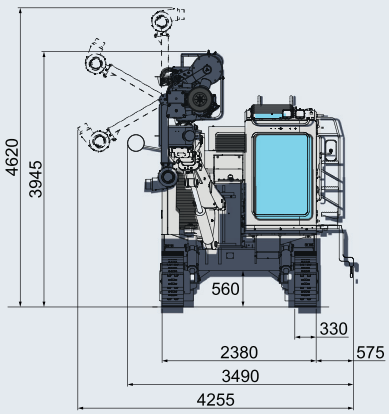

Dimensions (mm)

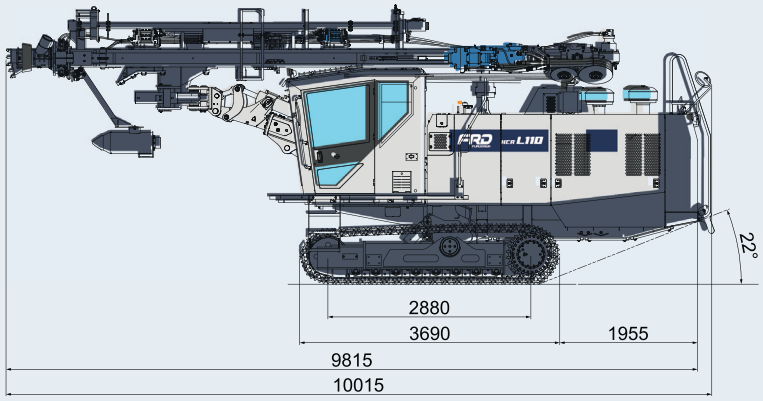

Drilling coverage (mm)

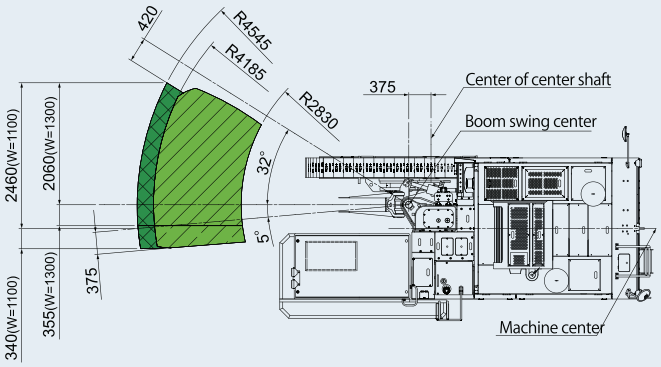

Note: "Operating weight" includes weight of fuel and oil (full).

Specifications are subject to change without prior notice

FRD - Furukawa Rock Drill Europe B.V. ©

Proostwetering 29 | 3543 AB Utrecht | The Netherlands

T +31 (0) 30 2412277 | E frd@frd.eu | www.frd.eu